Photonics Industries International, Inc.

DM Dual Head Series Nd:YLF & Nd:YAG Green Nanosecond Lasers

www.photonix.com

Photonics Industries' DM-DH Series Nd:YLF and Nd:YAG green nanosecond lasers combine remarkably high pulse energies (up to 200 mJ) or high average powers (up to 400 W) with a simple, rugged, and efficient form factor, all within a Dual Head configuration. Single head versions are available (see standard DM Series brochure). The proprietary resonator design[1] ideally fulfills the needs of both research and industry, from PIV research, to providing the necessary high energy for laser thermal processing or annealing applications in an industrial, compact form factor.

[1]US Patents #7,346,092 Diode side pumped high pulse energy Nd:YLF lasers, #7,082,149 High power diode side pumped solid state laser

Applications

- Particle Image Velocimetry (PIV)

High Speed Time Resolved PIV, Stereoscopic PIV, Volumetric Illumination (3D) PIV, Laser Tomography, Planar Laser Induced Fluorescence (PLIF), Interferometric Particle Imagining (IPI) Systems, Laser Light Sheet Illumination Systems

- Pumping Ti:Sapphire, Ultrafast Amplifier Systems
- High power cutting, drilling, welding, marking, patterning
- Laser Thermal Processing (LTP)

Annealing, Laser Heat-tempering Metal Marking, Laser Discoloration & Bleaching Plastic Marking

- Semiconductor Lithography Systems/Photolithography
- Water-jet Assisted Laser Cutting, Diamond Cutting Systems

Features

- Patented highest pulse energy green laser in the dual head regime:
  - Up to 200 mJ, Nd:YLF
  - Up to 400 W, Nd:YAG
- Exceptional repetition rate control:
  - Single shot up to 10 kHz, Nd:YLF
  - 1 to 50 kHz, Nd:YAG
  - Option up to 15 kHz available for Nd:YLF
- Excellent pulse stability:
  - < 0.5% rms
- Proprietary Twin Pulse mode option for Quad Pulse in the Dual Head configuration:
  - Generation of up to 4 pulses from a single trigger signal
  - Controllable pulse separation down to < 1 μs for Dual Head
- TEM_{00} beam option available. Contact us.
- Unmatched reliability
  - < 1% service call requests within the warranty period in the latest 24-month statistics

Specifications – **DM Dual Head Series High Pulse Energy Nanosecond Lasers**, Nd:YLF GRN Models

GRN Models	**DM2-527-20** (DH)	**DM2-527-30** (DH)	**DM2-527-40** (DH)	**DM2-527-50** (DH)	**DM2-527-60** (DH)	**DM2-527-100** (DH)
Beam and output specifications[1a]						
Wavelength	527 nm					
Average power[1b]	60 W at 3 kHz	90 W at 3 kHz	120 W at 3 kHz	150 W at 3 kHz	180 W at 3 kHz	300 W at 3 kHz
Pulse energy[1b]	40 mJ at 1 kHz	60 mJ at 1 kHz	80 mJ at 1 kHz	100 mJ at 1 kHz	120 mJ at 1 kHz	200 mJ at 1 kHz
Pulse width	~180 ns at 1 kHz	~170 ns at 1 kHz	~130 ns at 1 kHz	~120 ns at 1 kHz	~110 ns at 1 kHz	~100 ns at 1 kHz
Pulse repetition rate[2]	Single shot to 10 kHz (option up to 15 kHz)					
Pulse-to-pulse stability[3]	< 0.5% rms					
Long term power stability[4]	~0.5% rms					
Beam spatial mode[5]	Multimode, M^2 10 to 16					
Beam pointing stability	< 25 µrad					
Beam divergence	9 mrad ±15%					
Beam roundness	> 85%					
Beam diameter, at exit	~5 mm, nominal					
Operational specifications and system characteristics						
Interface	RS232, Ethernet, Software GUI, External TTL Triggering					
Warm-up time	< 5 minutes from standby, or cold start					
Electrical requirement	200-240 V AC					
Line frequency	50-60 Hz					
Ambient temperature	Ambient 15°C to 30°C (59°F to 86°F) Operating Range, Relative Humidity 90% Max., non-condensing					
Power consumption[6]	1.6 kW	2 kW	3.2 kW	3.4 kW	3.6 kW	4.6 kW
Laser head Dimensions (LxWxH)	26 x 11 x 4.25 in					27 x 18.5 x 4.25 in
Power supply Dimensions (LxWxH)[7]	16 x 16.2 x 3.5 in					
Laser head weight	84 lbs (38.1 kg)					200 lbs (90.7 kg)
Power supply weight	20 lbs (9.1 kg)					
Cooling system	Water-cooled					

1a. Unless otherwise stated, beam and output data specified is taken for each individual head
1b. Total from both heads combined
2. Lower pulse repetition rates (down to < 1 kHz) performance achieved by pulse energy capping
3. Measured at ambient temperature ± 2°C
4. Measured over 8 hours ± 1°C
5. TEM_{00} beam option available. Contact us.
6. Power consumption data does not include an external chiller's power consumption
7. Total width with rack mount option is 19 in. Please note height in rack units is 2U.

Photonics Industries International, Inc.

Specifications – **DM Dual Head Series High Power Nanosecond Lasers**, Nd:YAG GRN Models

GRN Models	**DM2-532-60** (DH)	**DM2-532-100** (DH)	**DM2-532-150** (DH)	**DM2-532-200** (DH)
Beam and output specifications[1a]				
Wavelength	532 nm			
Average power[1b]	120 W at 10 kHz	200 W at 10 kHz	300 W at 10 kHz	400 W at 10 kHz
Pulse energy[1b]	12 mJ at 10 kHz	20 mJ at 10 kHz	30 mJ at 10 kHz	40 mJ at 10 kHz
Pulse width	~150 ns at 10 kHz	~190 ns at 10 kHz	~200 ns at 10 kHz	~150 ns at 10 kHz
Pulse repetition rate[2]	1 to 50 kHz	1 to 30 kHz	1 to 50 kHz	
Pulse-to-pulse stability[3]	< 1% rms			< 1.5% rms
Long term power stability[4]	< 0.5% rms			
Beam spatial mode[5]	Multimode, M^2 ~15	Multimode, M^2 20 to 25	Multimode, M^2 15 to 20	Multimode, M^2 < 22
Beam pointing stability	< 25 µrad			
Beam divergence	< 10 mrad			
Beam roundness	> 85%			
Beam diameter, at exit	~3 mm, nominal		~4.5 mm, nominal	
Operational specifications and system characteristics				
Interface	RS232, Ethernet, Software GUI, External TTL Triggering			
Warm-up time	< 5 minutes from standby, or cold start			
Electrical requirement	200-240 V AC			
Line frequency	50-60 Hz			
Ambient temperature	Ambient 15°C to 30°C (59°F to 86°F) Operating Range, Relative Humidity 90% Max., non-condensing			
Power consumption[6]	3 kW	3.5 kW	4.5 kW	5 kW
Laser head Dimensions (LxWxH)	26 x 11 x 4.25 in		27 x 18.5 x 4.25 in	
Power supply Dimensions (LxWxH)[7]	16 x 16.2 x 3.5 in			
Laser head weight	84 lbs (38.1 kg)		200 lbs (90.7 kg)	
Power supply weight	20 lbs (9.1 kg)			
Cooling system	Water-cooled			

1a. Unless otherwise stated, beam and output data specified is taken for each individual head
1b. Total from both heads combined
2. Lower pulse repetition rates (down to < 1 kHz) performance achieved by pulse energy capping
3. Measured at ambient temperature ± 2°C
4. Measured over 8 hours ± 1°C
5. TEM_{00} beam option available. Contact us.
6. Power consumption data does not include an external chiller's power consumption
7. Total width with rack mount option is 19 in. Please note height in rack units is 2U.

Photonics Industries International, Inc.

Dimensional Drawings

DM2-527 (DH)**, 40-120 mJ**
DM2-532 (DH)**, 120-200 W**

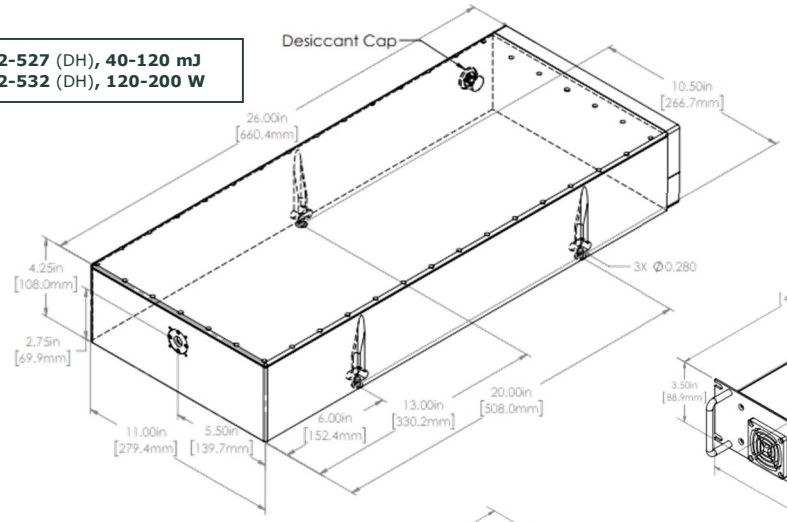

DM2 (DH) **Power Supply**

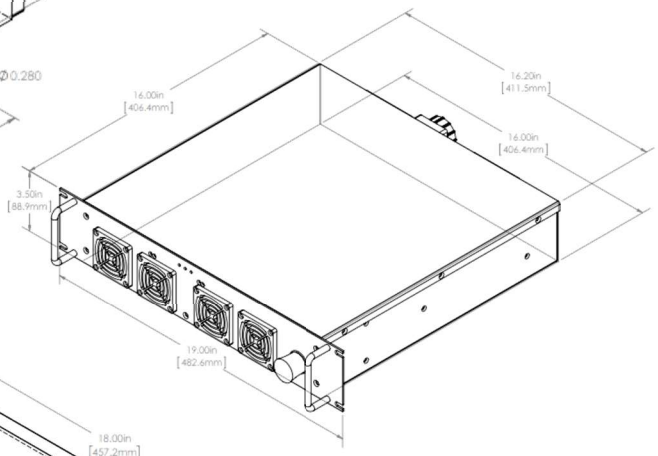

DM2-527 (DH)**, 200 mJ**
DM2-532 (DH)**, 300-400 W**

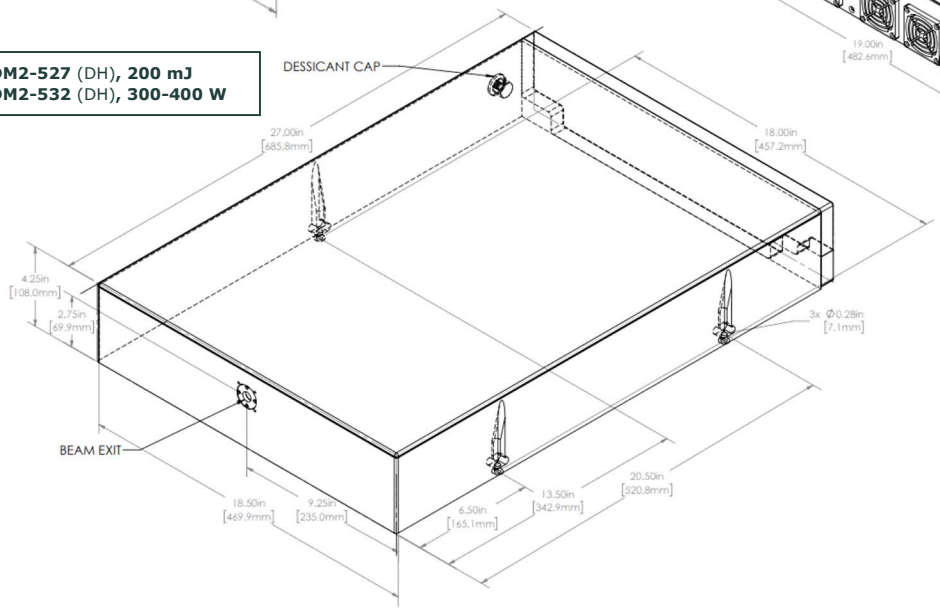

Photonics Industries DM Dual Head Series nanosecond lasers have a separate external power supply box, no longer requiring an external controller or utility module. The RF driver is located in the laser head, and all control electronics and connections for operation and control of the laser can be found on the back panel of the compact laser head.

Product specifications, characteristics, and dimensional drawings are subject to change without notice.

Photonics Industries conforms to provisions of US 21 CFR 1040.10 & 1040.11 and is made under one or more US patents listed below: 9,531,147, 8,817,831, 7,869,471, 7,346,092, 7,082,149, 7,079,557, 6,999,483, 6,980,574, 6,961,355, 6,842,293, 6,762,405, 6,690,692, 6,587,487, 6,584,134,6,366,596, 6,356,578, 6,327,281, 6,246,707, 6,229,829, 6,108,356, 6,061,370, 6,028,620, 5,936,983, 5,898,717 and Pending Patents

Main Headquarters: 1800 Ocean Ave, Ronkonkoma, New York 11779, United States

Photonics Industries International is the pioneer of intracavity harmonic lasers and is at the forefront of developing, manufacturing and marketing a wide range of nanosecond, sub-nanosecond, picosecond and femtosecond lasers for industrial, scientific, defense, and medical industries. Check out our products and see how we can help you apply our lasers to your needs.

Website - Products - Applications - Company - Contact - International Network

LASER RADIATION

Photonics Industries International, Inc.

光と人をつなぐ

Rayture Systems

レイチャーシステムズ株式会社
〒160-0006 東京都新宿区舟町７ ロクサンビル７Ｆ
TEL：03-3351-0717 FAX：03-3351-6771
URL：http://www.rayture-sys.co.jp
E-mail : laser@rayture-sys.co.jp